STERN-WILLIAMS

MODEL EB-54, EB-66, EB-70, EB-78 ELFIN SQUARE MOP SINK

The ELFIN is a rugged economical unit with plain curbs on all sides. It is installed quickly in one single operation on the finished floor. The ELFIN is available in four square models. All models come with the QDC3XH 3” centered stainless steel drain with removable flat stainless steel strainer and screws.

(Shown above) Model EB-54

FEATURES

- Terrazzo is composed of pearl gray marble chips cast in white Portland cement which produces a compressive strength of 3000 PSI seven days after casting; then ground smooth, grouted and sealed to resist stains and moisture.
- Mop service basin shall meet requirements CSA B45.8-18 / IAPMO Z403-2018.
- The Elfin series shoulders have 6” high outside measurements, 3-3/4″ high inside measurements, and are 1-1/4″ wide.
- Drain shall be stainless steel cast integral with removable stainless steel strainer, and sized for a gasket (QDC3XH000 included for 3” XHCI, plastic or steel pipe) or a caulked lead connection not less than 1″ deep to a 3″ pipe.
- Custom configurations available - Drain positions, overall sizes, integral stainless steel caps or tiling flanges options. Call for more information and pricing.

OPTIONAL COMPONENTS

- ☐ **S223-0003:** Lint Basket
- ☐ **BP:** Back Panels - 24”, 24”x36”, 28”, 30”, 32”, 26”
- ☐ **V-70:** Vinyl Bumper Guards
- ☐ **A-20:** Aluminum Bumper Guards
- ☐ **T-10-VB:** Mop Sink Faucet - Rough Chrome
- ☐ **T-15-VB:** Mop Sink Faucet - Polished Chrome
- ☐ **T-35:** 30” Hose and Wall Bracket
- ☐ **T-40:** Stainless Steel Mop Hanger
- ☐ **T-40-SF:** Stainless Steel Shelf
- ☐ **QDC3SN000:** Quick Connect Gasket for 3” SV and NHCI Pipe
- ☐ **QDC32000:** Quick Connect Gasket for 2” PVC and Iron Pipe

Pricing for optional components can be found at sternwilliams.com/pricing/

13920 Cypress Lane Grandview, MO 64030 | 800-323-2359 | sternwilliams.com

STERN-WILLIAMS

ORDERING OPTIONS

Part Number

EB-

Size

- ☐ **54:** 24x24x6”
- ☐ **66:** 30x30x6”
- ☐ **70:** 32x32x6”
- ☐ **78:** 36x36x6”

DIMENSIONS

All dimensions subject to manufacturing variance of plus or minus 1/4″ (6 mm)

MODEL	SIZE	A	B	C
EB-54	24x24x6	24	24	12
EB-66	30x30x6	30	30	15
EB-70	32x32x6	32	32	16
EB-78	36x36x6	36	36	18

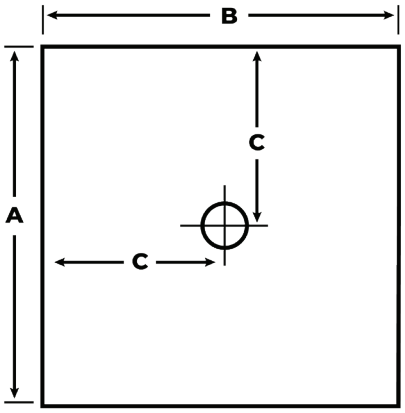

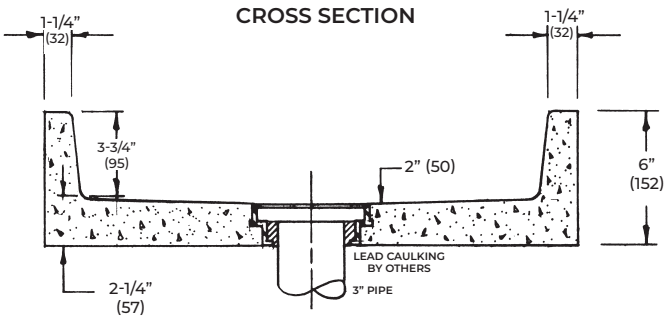

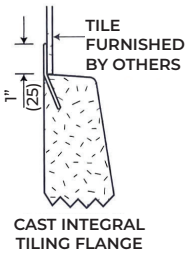

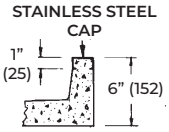

SPECS

Furnish and install Elfin 6” Square mop service basin (mop sink) manufactured by Stern-Williams using white Portland cement. The terrazzo material shall have a compressive strength not less than 3000 PSI after full cure. Mop service basin shall meet requirements CSA B45.8-18 / IAPMO Z403-2018. All exposed terrazzo surfaces shall be ground smooth, grouted, and factory sealed to resist stains and moisture. Mop service basins include a stainless drain body that is cast integral to the basin with a stainless steel strainer. Drain shall have inside connection to a 3” pipe sealed with factory provided gasket. Shall be made in the USA.

Stern-Williams offers optional integral casted stainless steel caps, tiling flanges or lint basket.